PART No. EN4SD302420WLG

Data subject to change without notice

Isometric drawing Not to Scale

Gross Automation (877) 268-3700 · www.hammondenclosuresales.com · sales@grossautomation.com

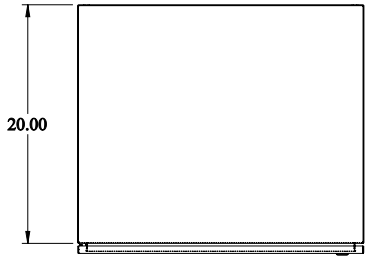

TOP VIEW

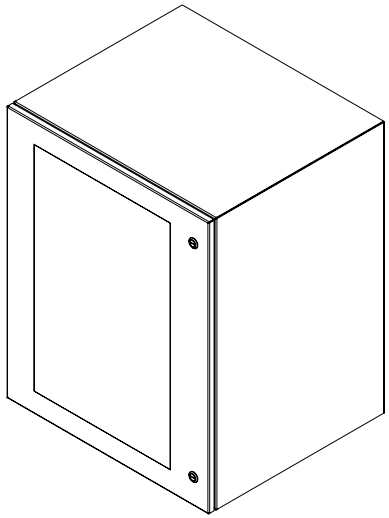

ISOMETRIC VIEW

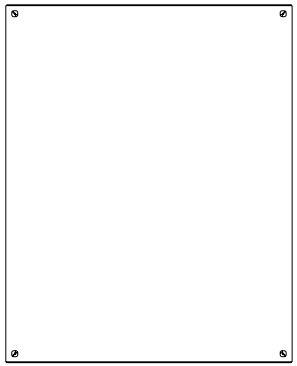

BACK VIEW

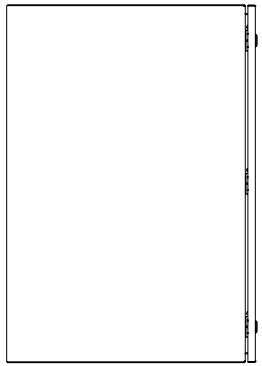

LEFT SIDE VIEW

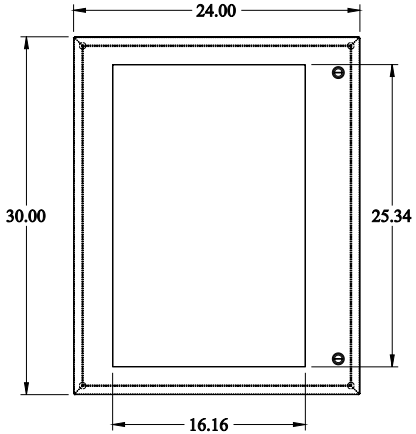

FRONT VIEW

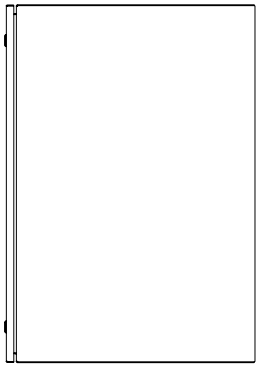

RIGHT SIDE VIEW

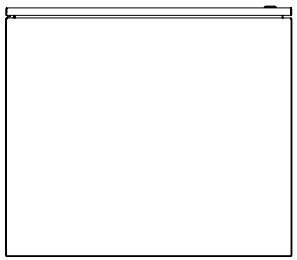

BOTTOM VIEW